NOTES
1 VIREFRAME GEOMETRY ON HIDDEN LAYER
2 MACHINE TOP OF BOTH DOWEL BORE ASSY
3 ALSO INCORPS KATECH #M3X.5 BAN.01 BOLT

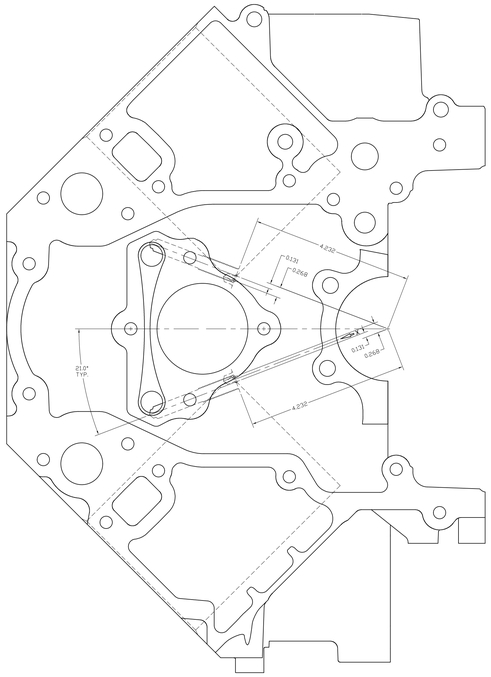

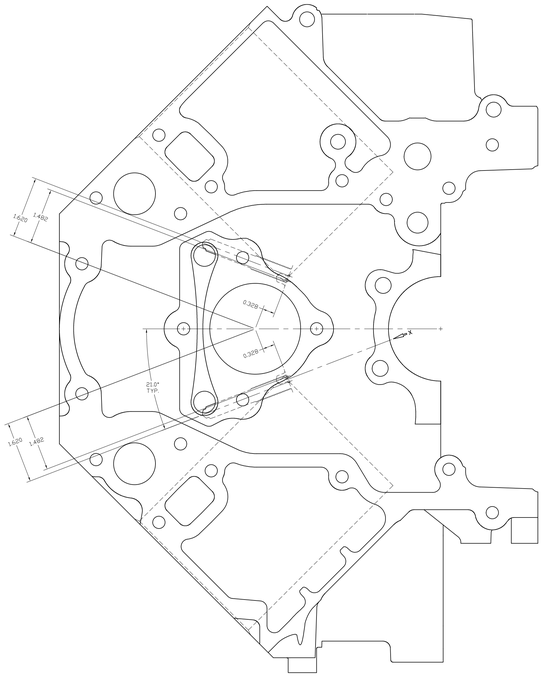

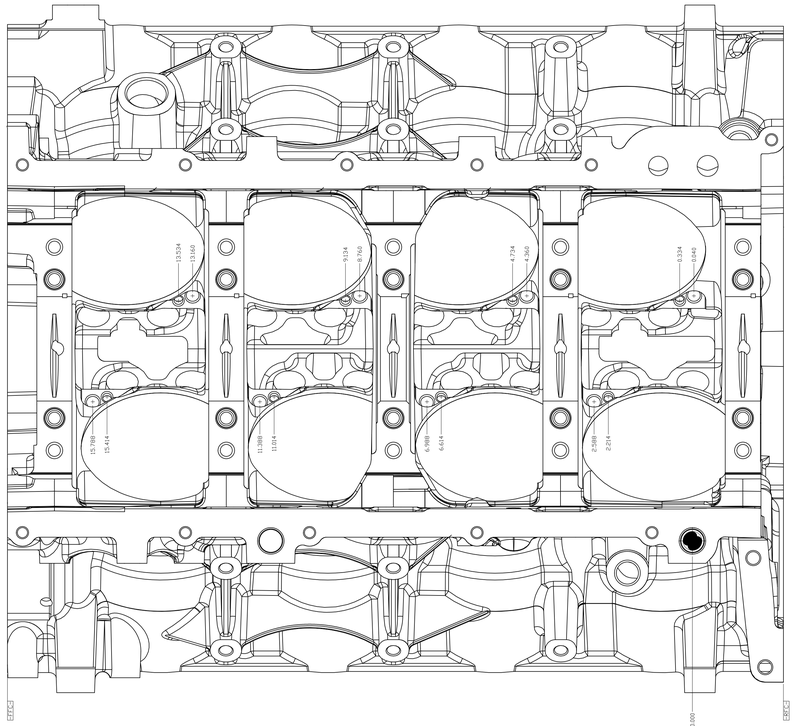

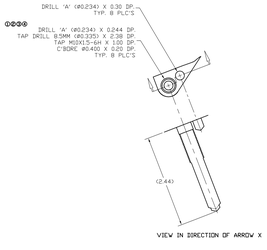

VIEW IN DIRECTION OF ARROW X

20MAY03	B	4	ADDED C'BORE FOR LENGTH BAN.01 BOLT	KAM
06APR03	A	3	INCORPORATED HOLE VALIDITY & VIEW	BLP
06APR03	A	2	FIXED HOLE # & MAS #'S PCS	BLP
11DEC04	A	1	INCORPORATED HOLE NOTATIONS	KAM
29DEC04	A		ADDED NOTES	KAM
DATE	REV	ENG.	DESCRIPTION	BY

GEOMETRIC DRAWING SYMBOLS

⌭ FLATNESS	Ø DIAMETER	Ⓜ LEAST MATERIAL CONDITION
○ STRAIGHTNESS	SØ SPHERICAL DIAMETER	Ⓛ MAXIMUM MATERIAL CONDITION
⌓ CIRCULARITY	R RADIUS	(TW) TOTAL WORKING TOLERANCE BAND
⌭ CYLINDRICITY	SR SPHERICAL RADIUS	(M) MINUTES
∠ ANGULARITY = LINE	⌒ ARC LENGTH	(S) SECONDS
∥ PARALLELISM	⌓ CHORD LENGTH	(DEC) DECIMAL DEGREES
⊥ PERPENDICULARITY	⌓ PROFILE OF A SURFACE	X WITH "X" CENTERING

GENERAL TOLERANCES UNLESS OTHERWISE SPECIFIED

X PLACE ± .25	ENGLISH UNITS UNLESS NOTED	⊕
X PLACE ± .125	ALL ANGLES ±0.25°	THIRD ANGLE PROJECTION
X PLACE ± .0005		

MATERIAL: CAST ALUMINUM

MACHINING - GM LS CYLINDER CASES FOR PISTON OILERS

SCALE: FULL	M3957-R03.A	GROUP NO.	D.033
DATE: 14SEP04		PRC	N/A
REV'D BY: CBN		TECH.DOC	
DRAWN BY: KAM	ENG. NO.	MAC.DOC	

Kalmar Ind

SOME HIDDEN LINES OMITTED FOR CLARITY

E